LUCIDE

INSTALLATION DRAWING SPECIFICATIONS

ALION
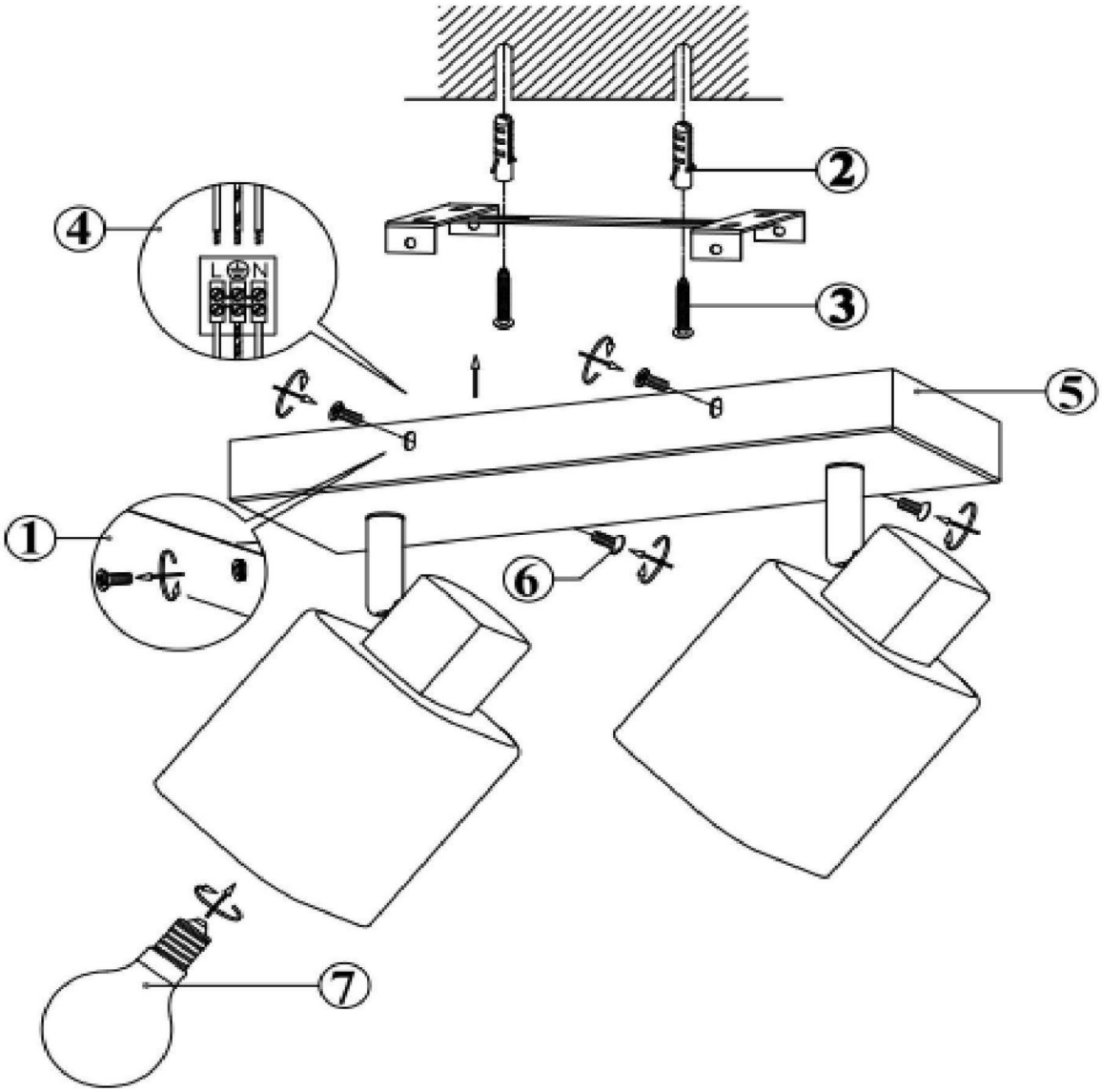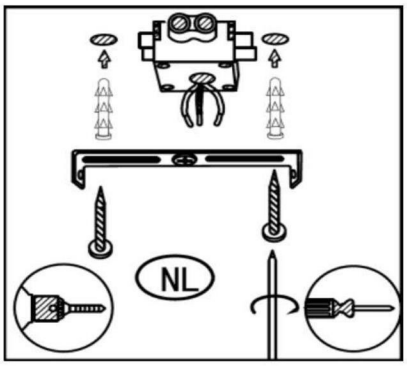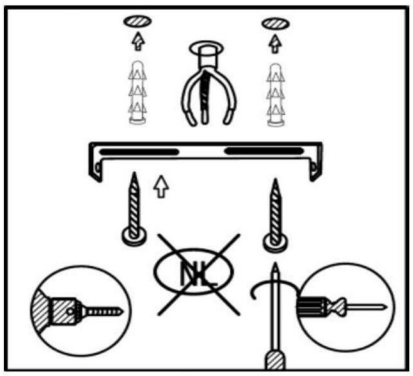
Item number: 17999/02/30
EAN code: 5411212176998